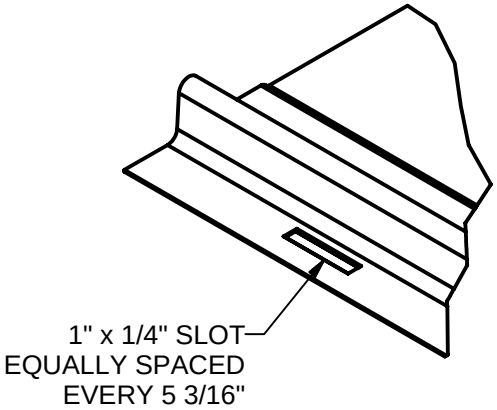

DETAIL A

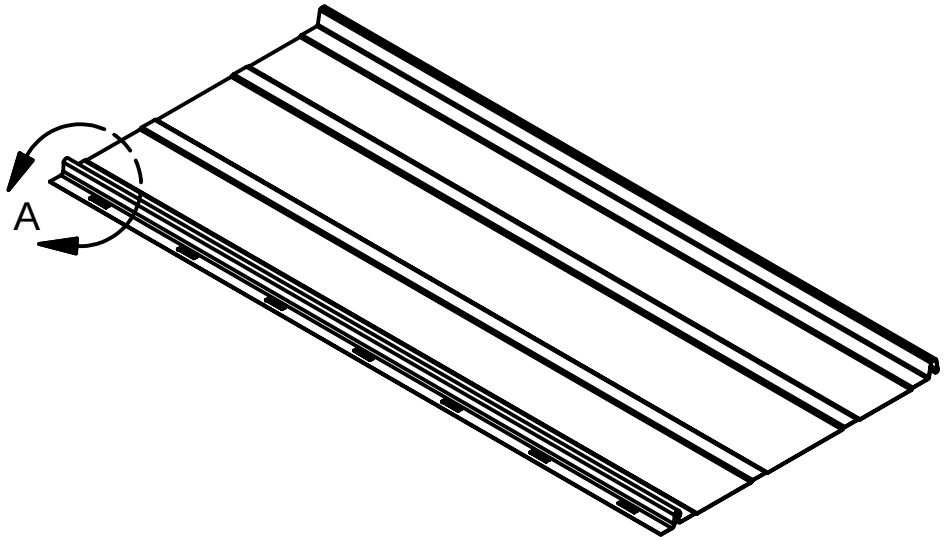

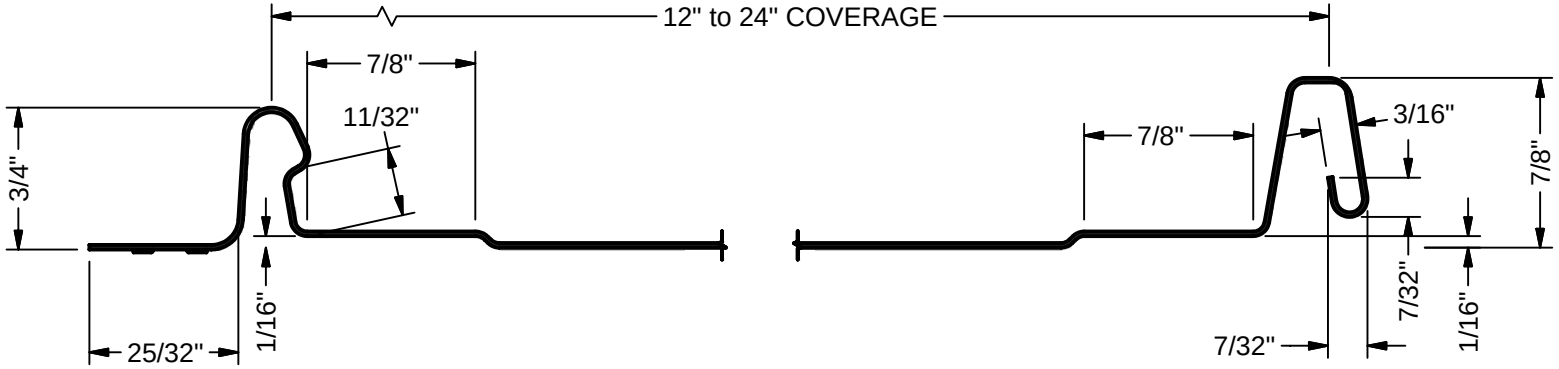

Note:
Material usage = 4.00in

MATERIAL	LENGTH	FINISH

NEW TECH MACHINERY CORP.

REVISION HISTORY	REV	ECN NO.	DATE	RELEASED BY

TOLERANCES
.XX = ± .01
.XXX = ± .005
FRACTION = ± 1/32"
ANGLE = ± 1/2°

DRAWN BY DeBerard	PART NAME FF100 PANEL PROFILE		
DATE 6/25/2002			
CHECK BY	SIZE A	SHEET 1 OF 1	REVISION 0
DATE	SCALE	PART NUMBER FF100	